SEAT

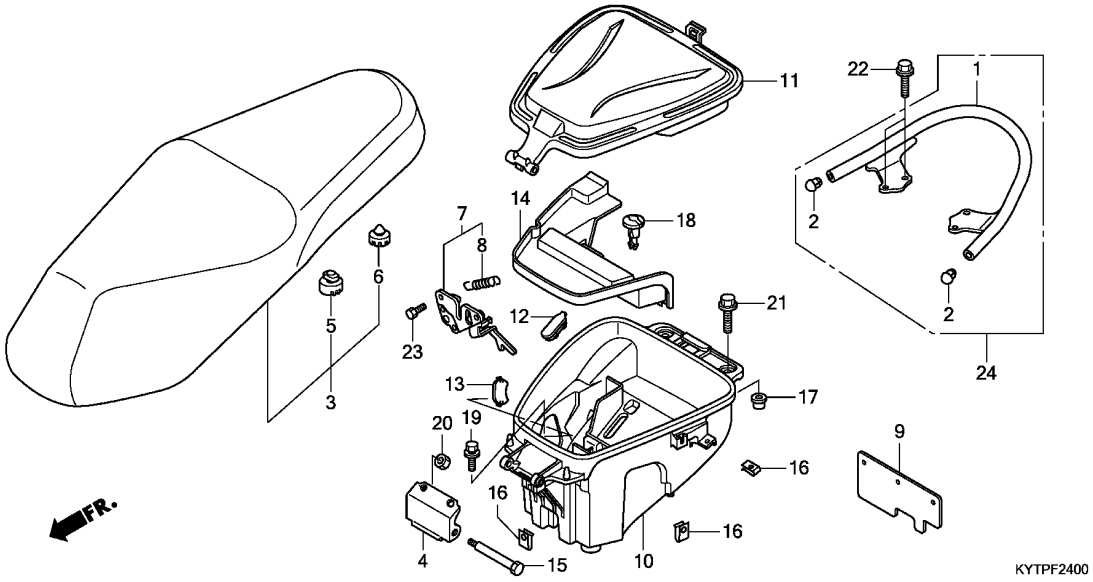

Ref. No.	L.O.N.	(Relative ref. Number) Description	F.R.T.
1		(24)	
	4131F6	RAIL, GRAB :REAR	0.1
3	4131E4	SEAT :DOUBLE	0.1
7	4131E8	CATCH, SEAT :REAR SIDE	0.4
10	412102	BOX, LUGGAGE	0.4
11	4121D5	LID, LUGGAGE BOX	0.1

Ref. No.	Part No.	Description	Reqd. QTY ACD110 CSC	Reqd. QTY ACD110 SC	Serial No.	Parts catalogue code
1	50410-KYT-940	PIPE, RR. GRIP	1	1		
2	50415-KYT-900	CAP, RR. GRAB END	2	2		
	50415-KYT-940		2	2		
3	77200-KYT-600	SEAT COMP., DOUBLE	1	1		
4	77201-KVG-900	HINGE, SEAT	1	1		
5	77214-KPH-900	RUBBER B, SEAT SETTING	2	2		
6	77215-KW7-900	RUBBER C, SEAT SETTING	2	2		
7	77230-KYT-901	CATCH COMP., SEAT	1	1		
8	77234-GN2-000	SPRING, SEAT LOCK	1	1		
9	80107-KYT-940	GUARD, HEAT	1	1		
10	81250-KYT-600	BOX, LUGGAGE	1	1		
11	81251-KYT-900	COVER, LUGGAGE BOX	1	1		
12	81252-KVY-900	CAP, LUGGAGE BOX	1	1		
13	81254-KVY-900	CAP, LUGGAGE SIDE	1	1		
14	81255-KYT-600	COVER, BATTERY	1	1		
15	90105-KVG-900	BOLT, SEAT HINGE	1	1		
16	90302-KWW-A00	NUT, SPRING, 4MM	5	5		
17	90501-KVY-700	COLLAR, LUGGAGE SET	2	2		
18	90683-GAZ-003	CLIP, TRIM	1	1		
19	93404-06010-00	BOLT-WASHER, 6X10	2	2		
20	94001-06000-0S	NUT, HEX., 6MM	2	2		
21	95701-06020-00	BOLT, FLANGE, 6X20	2	2		
22	95701-08016-00	BOLT, FLANGE, 8X16	4	4		
23	96001-06012-00	BOLT, FLANGE, 6X12	2	2		
24	50400-KYT-900	PIPE ASSY., RR. GRIP	1	1		