Safety Labels

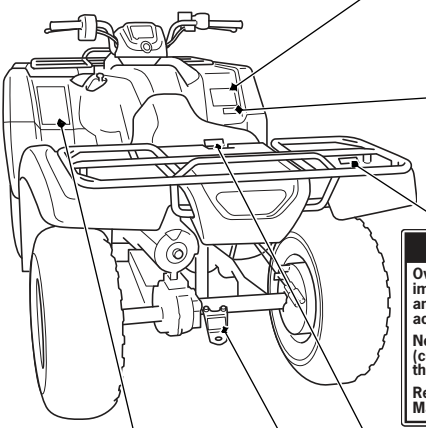

⚠ WARNING

UNDER 16

Operating this ATV if you are under the age of 16 increases your chance of severe injury or death.

NEVER operate this ATV if you are under age **16**.

BRAKING INFORMATION

With four-wheel drive, operating any brake control causes braking at both the front and rear wheels. For detailed braking information, refer to the Owner's Manual.

⚠ WARNING

Overloading this ATV or carrying cargo improperly can change handling,stability and braking performance and can lead to an accident.

Never exceed the maximum rear cargo limit (combined weight on the rear rack and in the storage area) of : 133 lbs (60 kg).

Refer to instructions in the Owner's Manual.

⚠ WARNING

Improper ATV use can result in SEVERE INJURY or DEATH

ALWAYS USE AN APPROVED HELMET AND PROTECTIVE GEAR | NEVER USE ON PUBLIC ROADS | NEVER CARRY PASSENGERS | NEVER USE WITH DRUGS OR ALCOHOL

NEVER operate:

- **without proper training or instruction**
- **at speeds too fast for your skills or the conditions**
- **on public roads - a collision can occur with another vehicle**
- **with a passenger - passengers affect balance and steering and increase risk of losing control**

ALWAYS:

- **use proper riding techniques to avoid vehicle overturns on hills and rough terrain and in turns**
- **avoid paved surfaces - pavement may seriously affect handling and control**

LOCATE AND READ OWNER'S MANUAL.

FOLLOW ALL INSTRUCTIONS AND WARNINGS.

⚠ WARNING

NEVER ride as a passenger.

Passengers can cause a loss of control, resulting in SEVERE INJURY or DEATH.

⚠ WARNING

Towing an improperly loaded trailer can cause loss of control.

- Read towing instructions in owner's manual
- Tow weight limit : **850**lbs. (**385**kg)
- Tongue weight : **30**lbs. (**14**kg)