Operation Component Locations
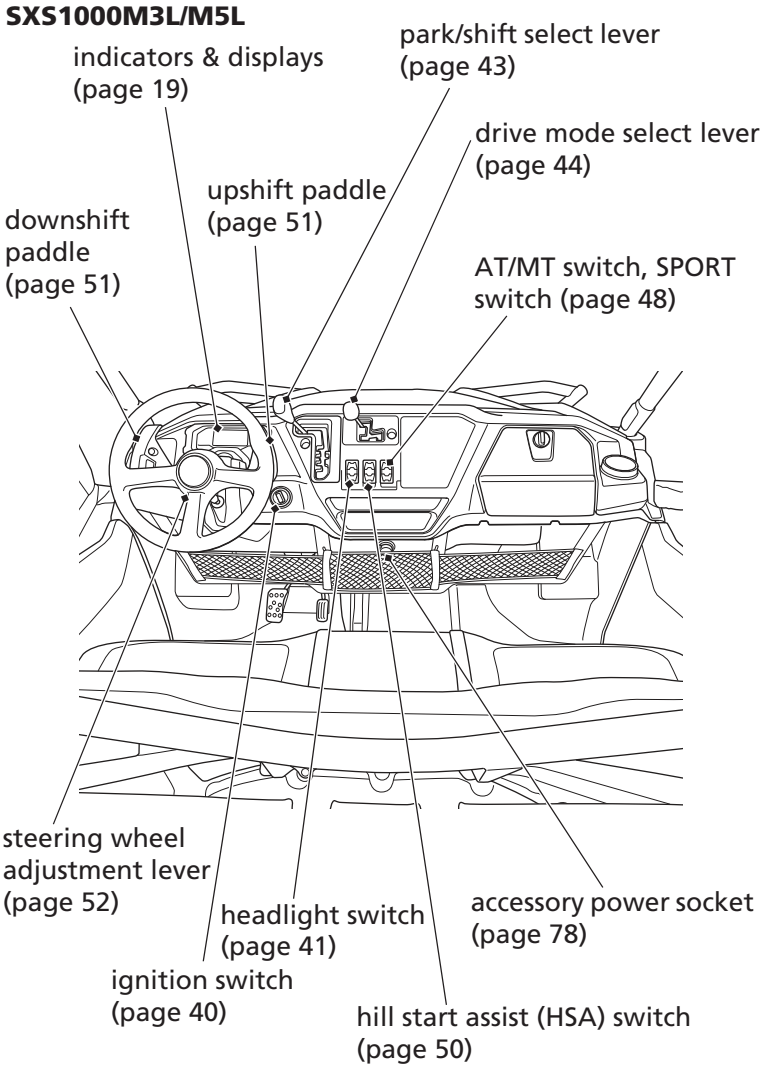
SXS1000M3L/M5L