WIRING DIAGRAM

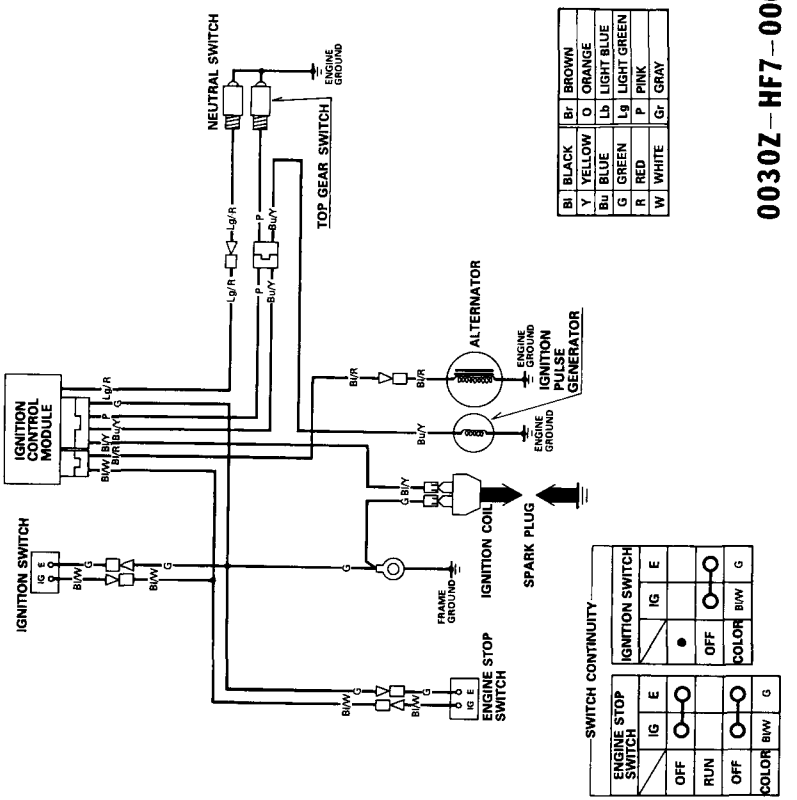

0030Z-HF7-0000