WIRING DIAGRAM

Canadian model

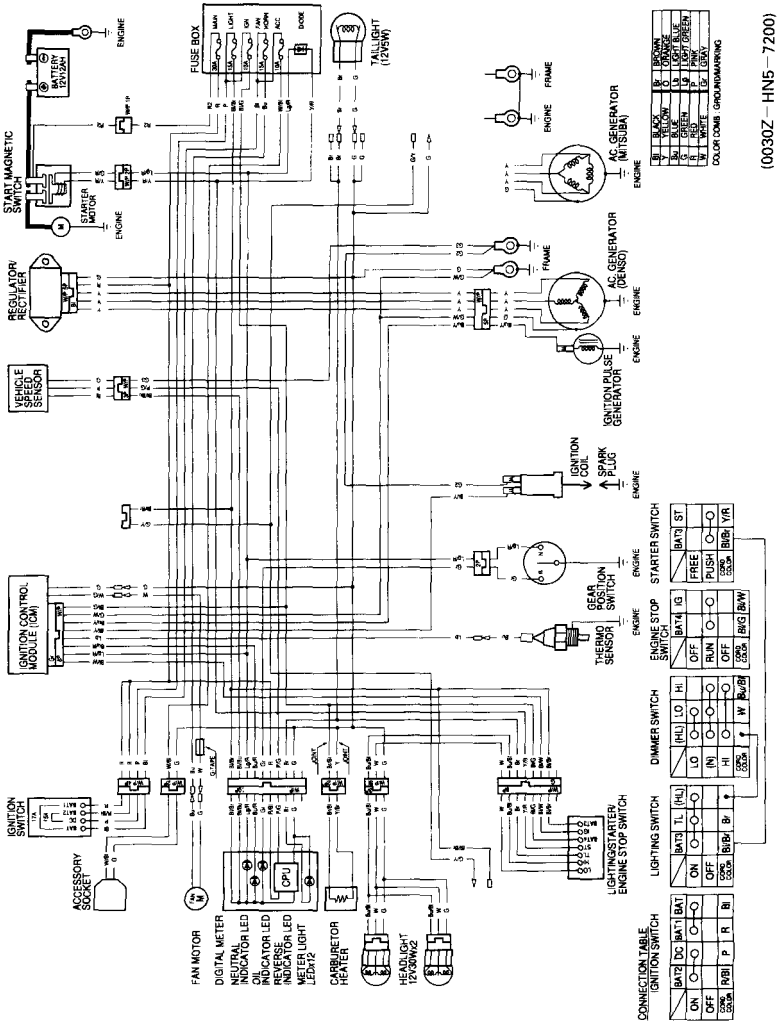

(0030Z – HN5 – 7200)